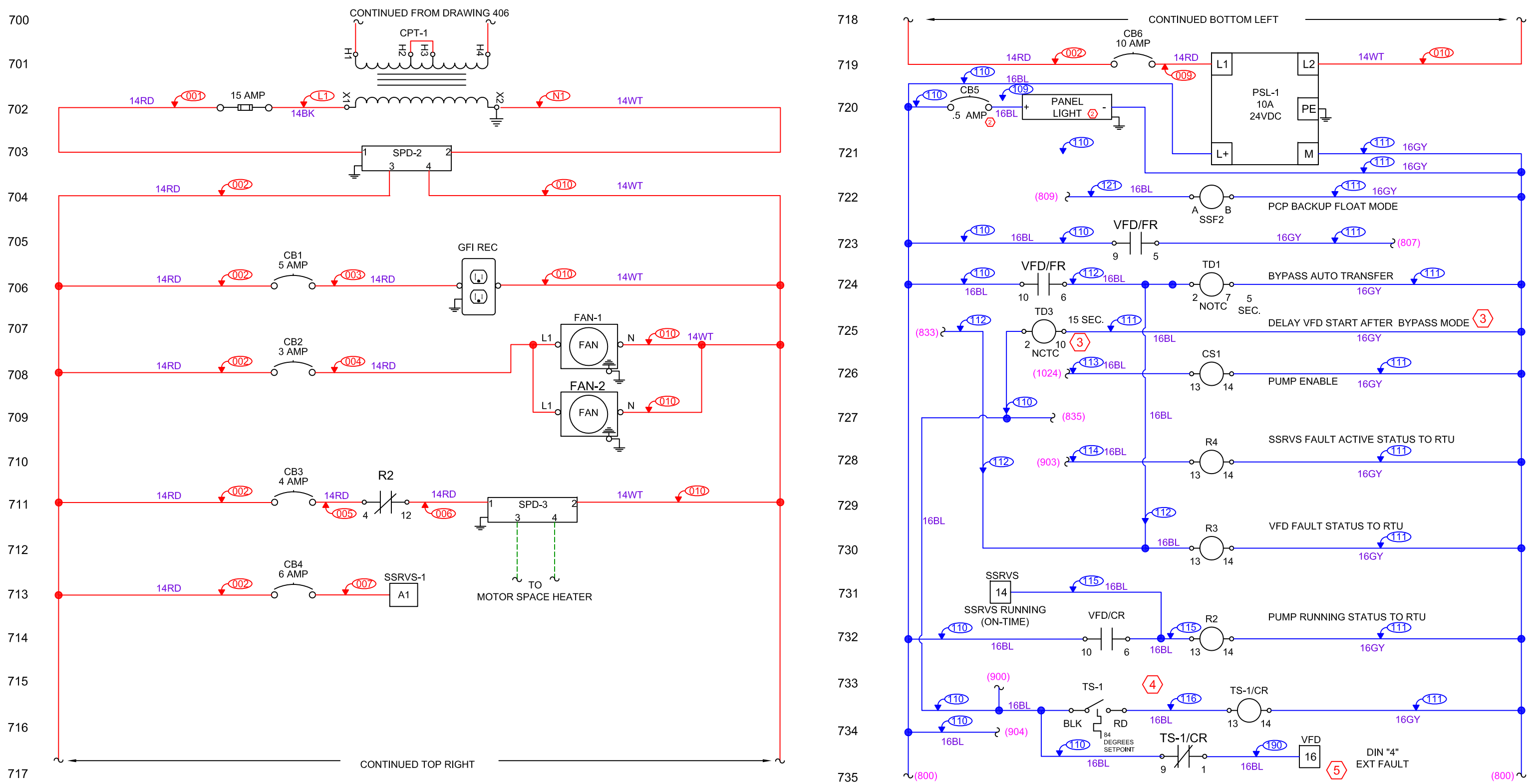

P= SPD PROTECTED TERMINAL SIDE

SCALE: N.T.S.	2	REVISED PANEL LTG AND CB 5	10-18-2013	JG	
	3	ADDED TD - 3	08-22-2014	JG	
DESIGN: IAG / LS	4	REMOVED BFR AND VFD/CR WIRING AND CONTACT	08-22-2014	JG	
	4	ADDED TS-1/CR, VFD INPUT AND REVISED WIRING	08-22-2014	JG	
DRAWN BY: JG	5	REVISED DIN "4" TYPO	09-11-2014	JG	
APPROVED BY: WW	NO	REVISION	DATE	BY	

WASTEWATER DIVISION,
INDUSTRIAL AUTOMATION GROUP

CITY OF ORLANDO, FLORIDA

TITLE:
LIFT STATIONS STANDARDS
≥ 50 HP VFD WITH SSRVS PUMP CONTROLLER
POWER DISTRIBUTION AND
CONTROL WIRING SCHEMATIC
PART 1

SHEET
407