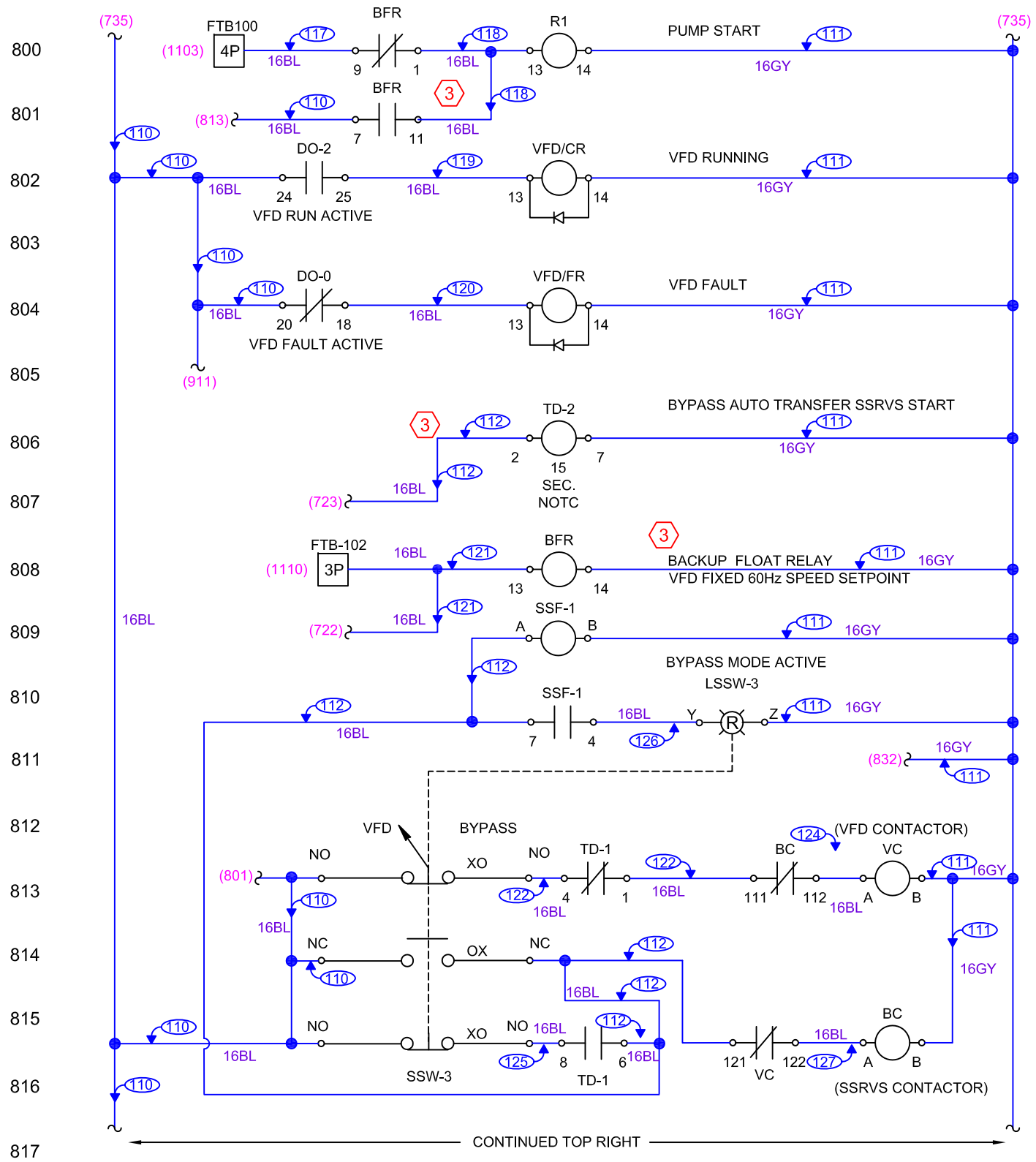

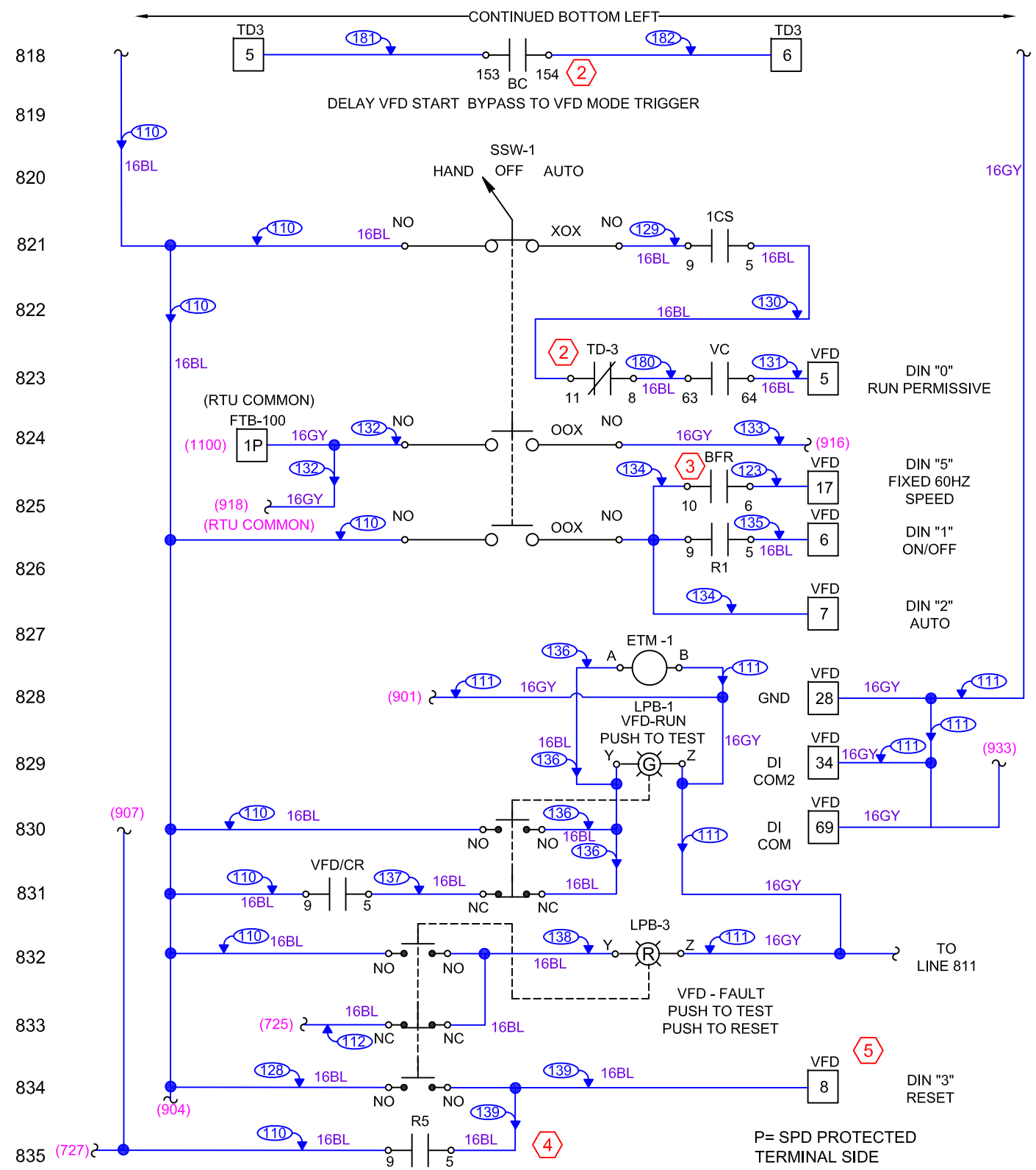

SCALE: N.T.S.	1	ADDED FTB DRAWING NOTES AND LAYER	10-18-2013	JG	
	2	ADDED TD-3 TRIGGER AND CONTACT	08-22-2014	JG	
DESIGN: IAG / LS	3	REVISED BFR WIRING TO VFD FIXED SET POINT INPUT	08-22-2014	JG	
	4	ADDED R5 AND WIRING	08-22-2014	JG	
DRAWN BY: JG	5	REVISED DIN "3" TYPO	09/11/2014	JG	
APPROVED BY: WW	NO	REVISION	DATE	BY	

WASTEWATER DIVISION,
INDUSTRIAL AUTOMATION GROUP

CITY OF
ORLANDO, FLORIDA

TITLE:
LIFT STATIONS STANDARDS
≥ 50 HP VFD WITH SSRVS PUMP
CONTROLLER
CONTROL WIRING SCHEMATIC
PART 2

SHEET
408