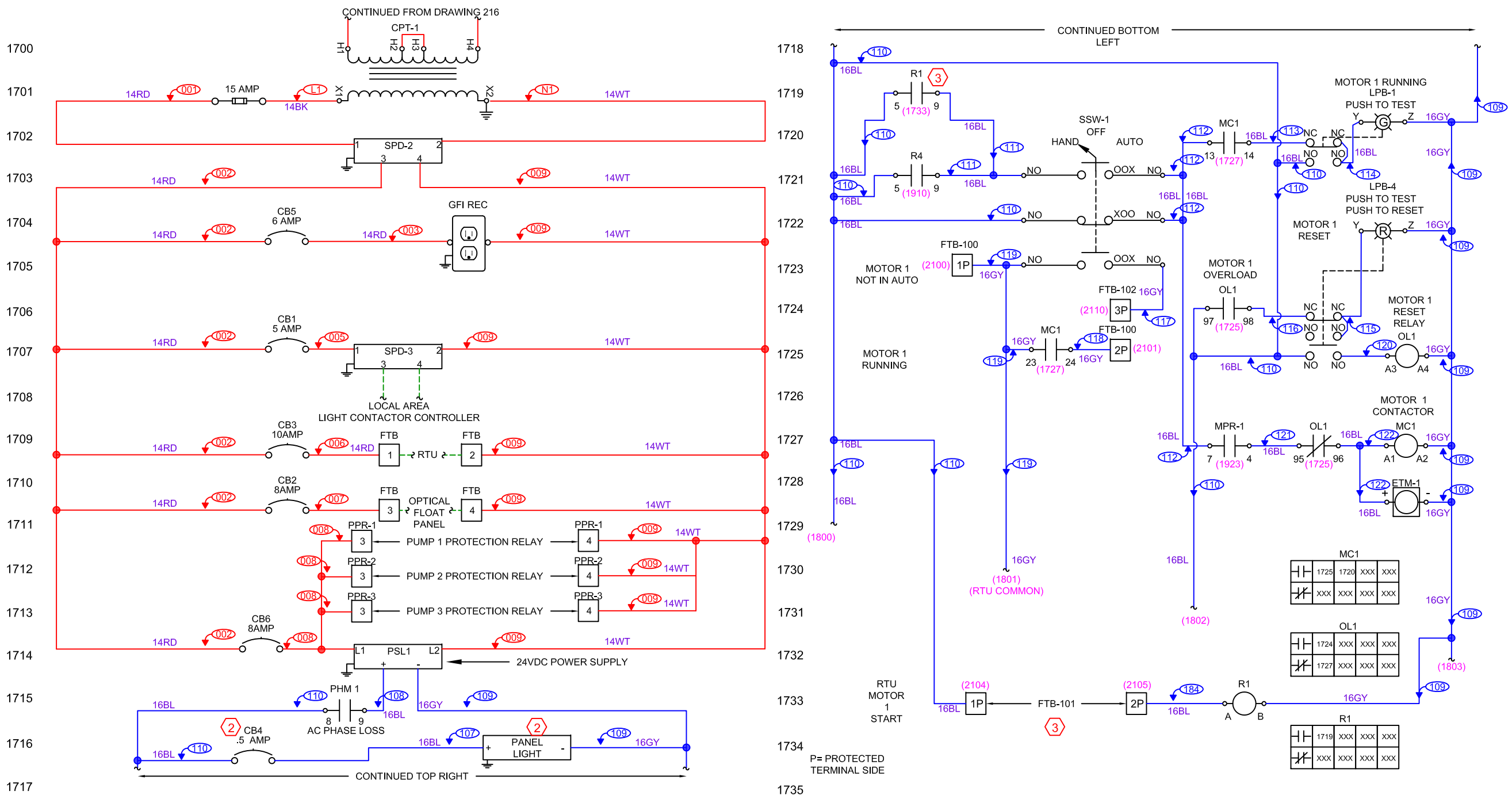

SCALE: N.T.S.	1	REVISED HOA AND ADDED DRAWING LOCATORS	10-25-2013	JG	
DESIGN: IAG / LS	2	REVISED CABINET WIRING AND CB	11-15-2013	JG	
DRAWN BY: JG	3	ADDED R1	05-06-2014	JG	
	4	REVISED TYPOS CIRCUIT BREAKERS	04-10-2015	JG	
APPROVED BY: WW	NO	REVISION	DATE	BY	

WASTEWATER DIVISION,
INDUSTRIAL AUTOMATION GROUP

CITY OF
ORLANDO, FLORIDA

TITLE:
LIFT STATIONS STANDARDS
< 25 HP NEMA STARTER
TRIPLEX PCP
CONTROL WIRING SCHEMATIC
PART 1

SHEET
217