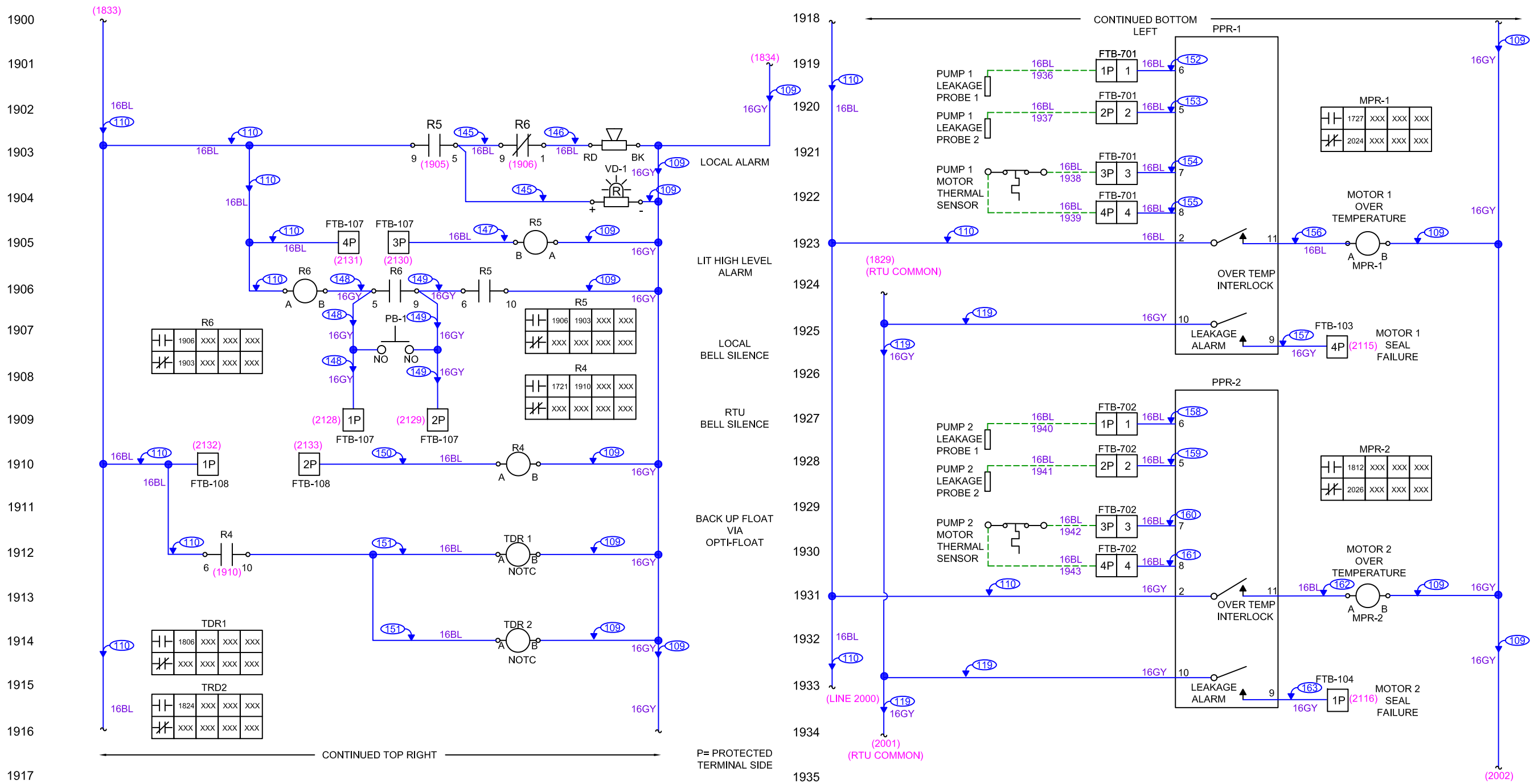

SCALE: N.T.S.	1	ADDED DRAWING LOCATORS	10-25-2013	JG	
DESIGN: IAG / LS					
DRAWN BY: JG					
APPROVED BY: WW	NO	REVISION	DATE	BY	

WASTEWATER DIVISION,
INDUSTRIAL AUTOMATION GROUP

CITY OF
ORLANDO, FLORIDA

TITLE:
LIFT STATIONS STANDARDS
< 25 HP NEMA STARTER
TRIPLEX PCP
CONTROL WIRING SCHEMATIC
PART 3

SHEET
219